TEAR SHEET

Orsay XL Chandelier
Item # PCD 5200BZ

Designer: Paloma Contreras

O/A Height: 43.25"
Fixture Height: 8.25"
Min. Custom Height: 14.25"
Width: 38"
Canopy: 5.5" Round
Finishes: BZ, HAB, PN
Socket: 4 - GU10 Candelabra
Wattage: 4 - 5 LED T7
Weight: 8 Pounds
Note: Bulbs Included

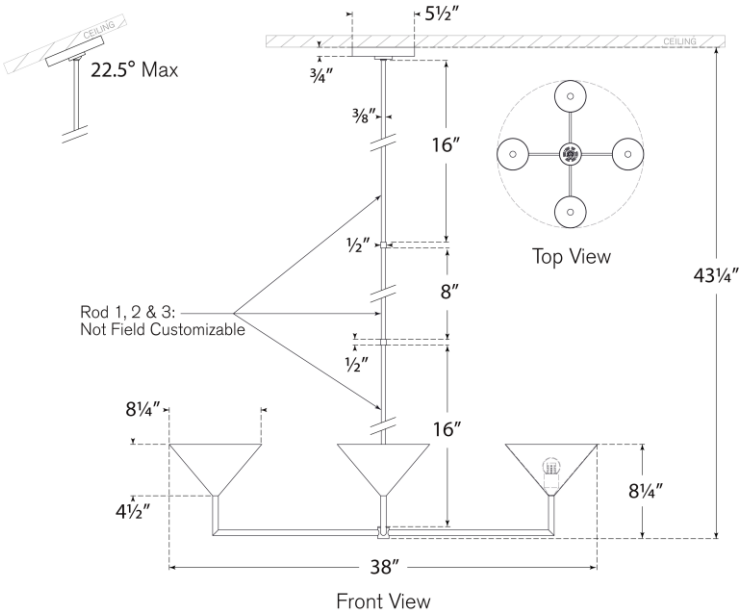

VISUAL COMFORT & CO.